High-Temperature SiC Power Module with Integrated LTCC-Based Gate Driver

P. Lai, S. Chinnaiyan, D. Gonzalez, S. Ahmed, A. Mantooth, Z. Chen

Department of Electrical Engineering, University of Arkansas, Fayetteville, AR 72701 USA

Keywords: Silicon carbide, power module, power device packaging, gate driver, high-temperature applications.

Abstract

This paper proposes a high-temperature SiC power module. High-temperature gate drivers were fabricated on low temperature co-fired ceramic (LTCC) substrates and integrated into the power module. LTCC-based High-temperature optocouplers, which were fabricated in-house, are used as isolation devices for the gate drivers. A detailed fabrication process of the high-temperature SiC power module is presented. High-temperature components and materials are utilized for the packaging. The fabricated high-temperature SiC power module was characterized by a double pulse test at both 25ºC and 100ºC. The turn-on and turn-off times are ~100 ns. The device showed small oscillations during turn-on, while the overshoot during the device turn-off is ~35 V.

INTRODUCTION

Silicon carbide (SiC) is one of the most commonly used materials in power applications due to its wide energy bandgap, high electric field strength and high thermal conductivity [1]. This significantly increases the power rating, operating voltage, and power density of power modules [2]. Despite the superior temperature tolerance of SiC power devices, the working temperature of power modules is still limited by packaging materials and other passive components. Moreover, to reduce the parasitic elements and improve the switching behaviors, gate driver circuitry is designed to be tightly integrated with the power devices. As a result, the operating temperature of the gate driver is required to be similar to that of the power devices. In order to improve the operating temperature and reduce the size and weight of power systems, a high-temperature SiC half-bridge power module with integrated gate drivers is proposed in this paper. High-temperature packaging materials are utilized for the encapsulation of the power module. Low temperature co-fired ceramic (LTCC) is used as the substrate of the gate driver circuits. High-temperature optocouplers are used as the galvanic isolation devices of the gate drivers, which achieves a compact size for the gate driving circuits. These approaches allow the gate driver boards to be closely integrated into the SiC power module.

DESIGN AND SIMULATION

In order to mitigate gate parasitics and increase the power density of the SiC power module, high-temperature gate driver circuits are designed and integrated into the power module for both the high-side and low-side switches. Fig. 1(a) shows the schematic of the gate driver. A high-temperature optocoupler is used as the galvanic isolation device, which protects the low-voltage logic controller from the high-power devices. A transimpedance amplifier (TIA) is designed by using a high-temperature operational amplifier (i.e., OPA211HT by Texas Instruments (TI)). It converts the photocurrent from the optocoupler to a voltage signal for a gate driver integrated circuit (IC). The gate driver IC (UCC27531 by TI) is utilized to provide sufficient voltage and current to drive the power devices. The three-dimensional (3D) model of the gate driver is shown in Fig. 1(b). LTCC substrates are designed and fabricated for the gate driver circuit. The LTCC substrates have the capacity to withstand high operating temperatures (i.e., 400ºC) [3]. They have also been demonstrated to be easily integrated into power modules [4]. Slots were designed on both the top and bottom sides of the LTCC substrates for the integration of the high-temperature optocoupler. Commercial optocouplers do not promise to operate at high temperatures as the degradation of output current and leakage current affect the operation of the gate driver circuits. Thus, LTCC-based high-temperature optocouplers were developed in house and designed to be

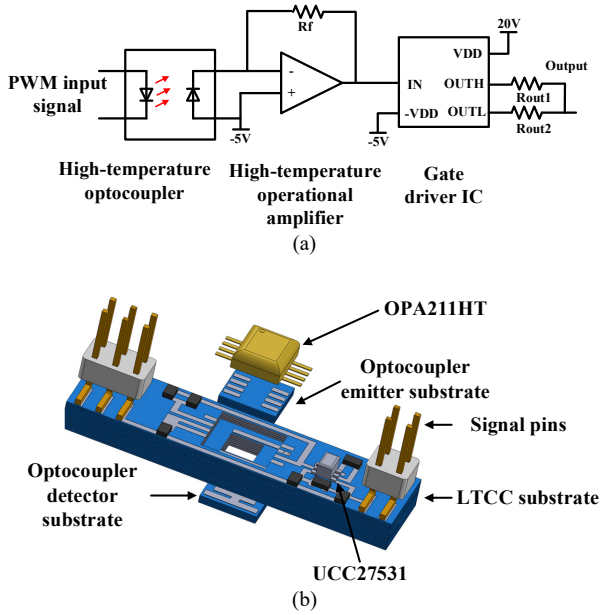

Fig. 1. (a) Schematic and (b) 3D model of the proposed LTCC-based gate driver.

compatible with the LTCC substrates. Previous works [5], [6] describe the detailed fabrication process and characteristics of high-temperature optocouplers. After the fabrication of the LTCC substrates, the optocoupler emitter and detector substrates are integrated into the slots. Then other components (e.g., OPA211HT, UCC27531, resistors and signal pins) are attached to the top layer of the LTCC substrate by high-temperature conductive epoxy (CW2400 by Chemtronics).

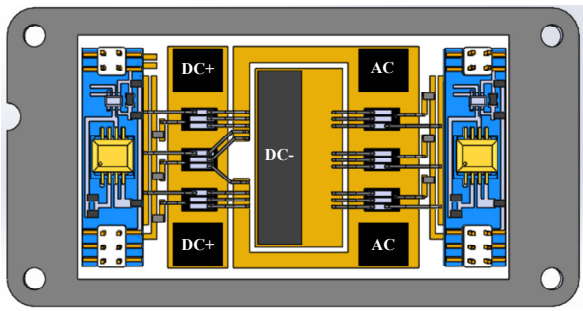

(a)

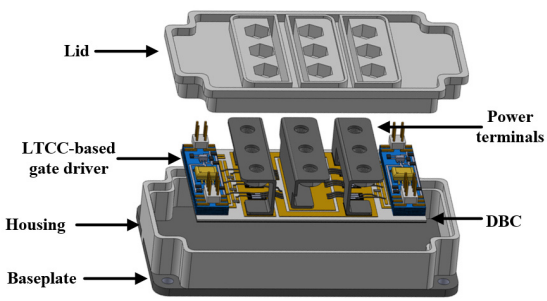

(b)

Fig. 2. (a) Layout and (b) 3D model of the proposed high-temperature SiC power module.

The layout of the proposed SiC power module is shown in Fig. 2(a). 1.2 kV, 149 A SiC MOSFETs (CPM3-1200-0013A from CREE) were integrated into the power module. For this module, each switching position has one device. However, it can be extended to three devices in parallel (Fig. 2a). As shown in Fig. 2(a), a symmetrical layout was designed to enhance the current balance and improve the thermal distribution. Two LTCC-based gate drivers are attached to the direct bonded copper (DBC). The output pads of the LTCC-based gate driver are on the bottom layer, which allows the gate driver to connect with the power devices by copper traces (on DBC) and bond wires. The short gate loop traces significantly reduce the gate loop parasitic inductance. Fig. 2(b) shows the 3D model of the proposed power module. The DC+ and DC- power terminals are placed facing each other to enhance the mutual inductance, which helps to decrease the power loop parasitic inductance. Moreover, the power terminals are designed almost as wide as the DBC (i.e., ~40 mm) to reduce the power loop parasitic inductance.

The parasitic inductance in the power loop and gate loop affects the switching behaviors of the power module. Thus, both power loop and gate loop parasitic inductances are simulated and extracted by ANSYS Q3D. The source and sink

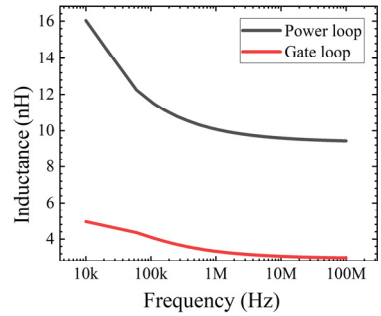

Fig. 3. Simulated parasitic inductance versus operating frequency.

were applied to the output pad (on the bottom layer of the LTCC substrate) of the LTCC-based gate driver and the gate pad of the power device to extract the gate loop inductance, while the DC+ and DC- terminals were set as source and sink during the power loop inductance extraction. The simulation results are shown in Fig. 3. Due to the close proximity between the gate driver and power devices, the parasitic inductance of the simulated gate loop is 3 nH at 1 MHz. The power loop inductance simulated from the DC+ terminal to the DC-terminal is 10 nH at 1 MHz.

A thermal simulation was also carried out to investigate the temperature distribution of the power module. Fig. 4

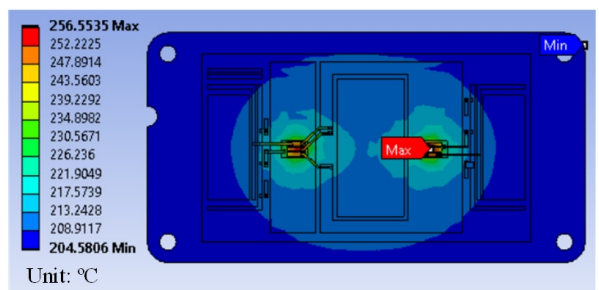

Fig. 4. Simulated Thermal distribution.

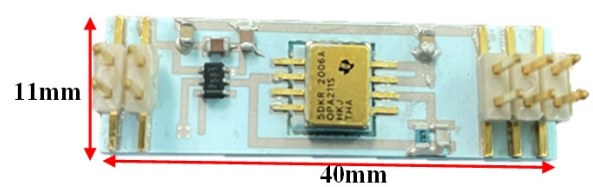

(a)

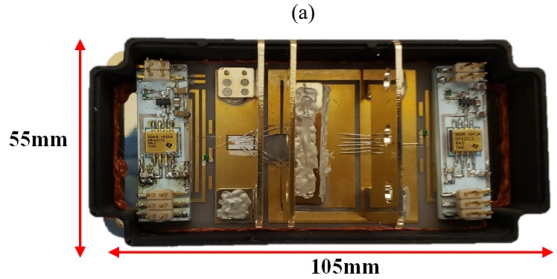

(b)

Fig. 5. Fabricated (a) LTCC-based gate driver, and (b) high-temperature SiC power module.

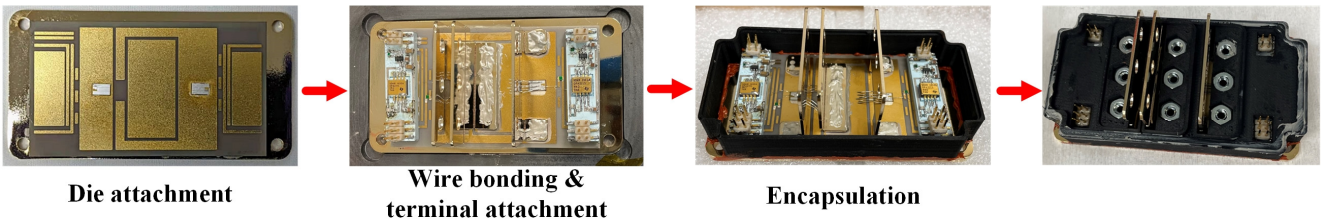

Fig. 6. Fabrication process of the high-temperature SiC power module.

shows the result of the thermal simulation. The power devices were set as heat flow with a 150 W (power rating) of power dissipation, and the ambient temperature was set at 200ºC. As shown in Fig. 4, the maximum temperature is ~256ºC, which is located at the junction of the power devices. The temperature of the LTCC-based gate driver is ~200ºC.

EXPERIMENTAL RESULTS

The fabricated LTCC-based gate driver and high-temperature SiC power module are shown in Fig. 5(a) and (b), respectively. The widths and lengths of the gate driver and power module are shown in the figure, and the heights of the gate driver and power module are ~5 mm and ~18 mm, respectively. The fabrication process of the high-temperature power module is shown in Fig. 6. A gold-plated copper base plate was utilized as the heat sink, and an aluminum nitride (AlN) based DBC, which has a similar coefficient of thermal expansion (CTE) to the base plate, was used as the substrate. The power devices were attached to the DBC by silver sintering. A high-thermal-conductive die attach adhesive (H9890-6A from NAMICS), which has a 300ºC melting point, was utilized as the solder paste. After the die attachment, wire bonding was completed to achieve the connection. Then the power terminals and LTCC-based gate drivers were attached. The power terminals were attached with high-thermal-conductive die attach adhesive (H9890-6A), and the LTCC-based gate drivers were attached with high-temperature conductive epoxy (CW2400). Finally, the power module was encapsulated in high-temperature resin and epoxy (EP17HT-LO by Master Bond) to achieve the passivation.

A double pulse test (DPT) was carried out to investigate the switching behaviors of the fabricated high-temperature SiC power module. The DPT results at 25ºC are shown in Fig. 7(a) to (c). The gate voltage is -5 V to 15 V, and the drain-source voltage is 100 V. As shown in Fig. 7(b) and (c), the turn-on and turn-off time of the power device is ~100 ns. The device shows small oscillations during turn-on, and the overshoot of the turn-off is ~35 V. In addition, the gate signal shows oscillations during the turn-off. This may be caused by the layout of the LTCC-based gate driver as the gate and source traces are narrow on the LTCC substrate.

The high-temperature SiC power module was heated by a hot plate (PC-600D by Corning) to investigate its high-temperature behaviors. Fig. 8 shows the DPT results of the high-temperature SiC power at 100ºC. The result does not show much difference from the one at 25ºC. The overshoot during the device turn-off increases from 35 V to 38 V.

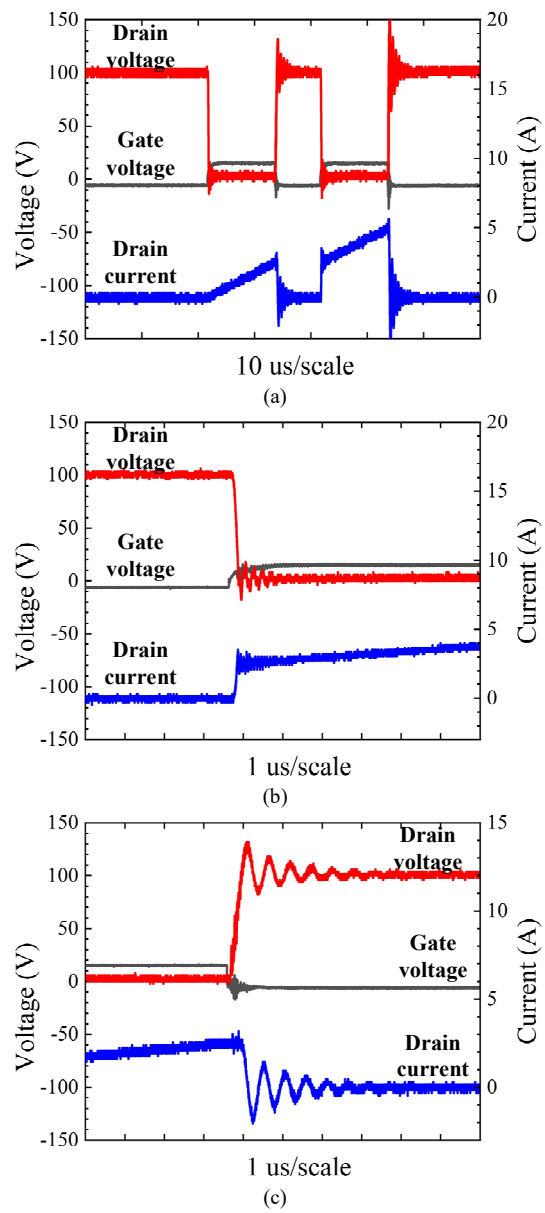

Fig. 7. Double pulse test results of the high-temperature SiC power module with integrated LTCC-based gate drivers at 25ºC (a) overview, (b) turn-on, and (c) turn-off.

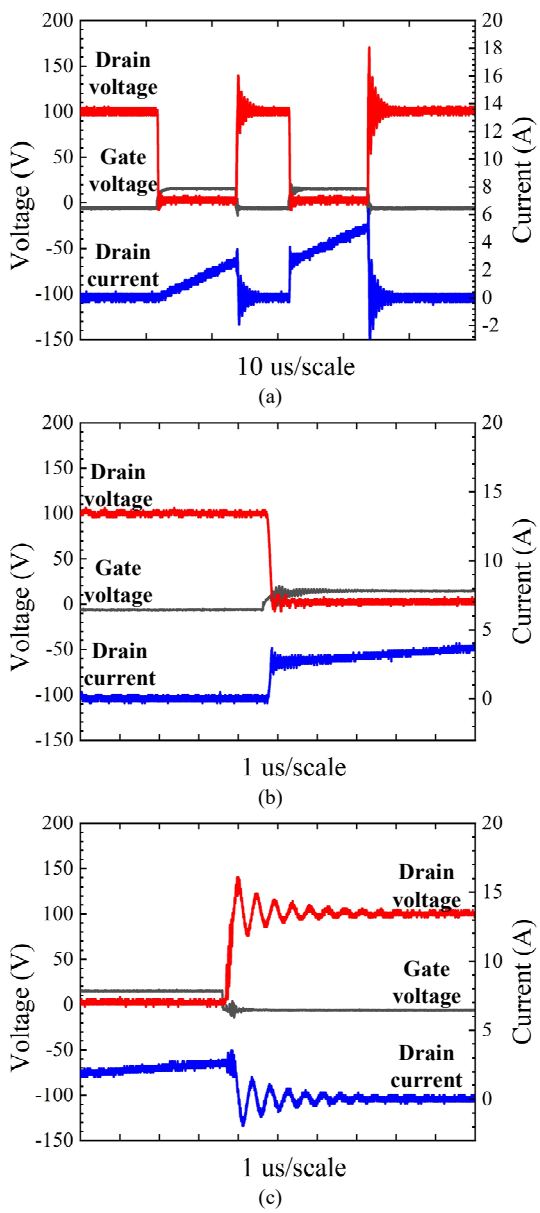

Fig. 8. Double pulse test results of the high-temperature SiC power module with integrated LTCC-based gate drivers at 100ºC (a) overview, (b) turn-on, and (c) turn-off.

CONCLUSIONS

In order to improve the high-temperature performance and reduce the size and weight of SiC power modules, a high-temperature SiC power module with integrated gate drivers were designed and fabricated. The gate drivers was fabricated based on LTCC substrates to achieve operations at high temperatures. A detailed fabrication process of the high-temperature SiC power module is presented in this paper. A double pulse test was carried out at both 25ºC and 100ºC to characterize the switching performance of the fabricated power module. The switching performance did not show much degradation from 25ºC to 100ºC.

In general, the proposed high-temperature SiC power module shows reliable switching behaviors at 25ºC and 100ºC. Double pulse tests at higher temperatures (e.g., 200ºC) and gate-source voltages (e.g., 1000 V) will be performed in future work to further investigate the proposed power module. The layout of the LTCC-based gate driver will also be improved to enhance its driving capability.

ACKNOWLEDGEMENTS

This work was supported by the National Science Foundation Engineering Research Center for Power Optimization of Electro-Thermal Systems (POETS) with cooperative agreements EEC-1449548.

REFERENCES

[1] J. A. Powell, "Silicon carbide a high temperature semiconductor", CECON'83 Cleveland Electrical/Electronics Conf. and Expo., pp. 28-32, Oct. 1983., doi: https://ntrs.nasa.gov/citations/19840006864.

[2] B. Whitaker et al., "A High-Density, High-Efficiency, Isolated On-Board Vehicle Battery Charger Utilizing Silicon Carbide Power Devices," in IEEE Transactions on Power Electronics, vol. 29, no. 5, pp. 2606-2617, May 2014, doi: 10.1109/TPEL.2013.2279950.

[3] B. Jiang, J. Haber, A. Renken, P. Muralt, L. Kiwi-Minsker, T. Maeder: Fine Structuration of low-temperature co-fired ceramic (LTCC) microreactors, Lab Chip, 15 (2015), pp. 563-574, doi: 10.1039/c4lc01105h.

[4] P. Sun, X. Cui, S. Huang, P. Lai, Z. Zhao and Z. Chen, "LTCC Based Current Sensor for Silicon Carbide Power Module Integration," in IEEE Transactions on Power Electronics, vol. 37, no. 2, pp. 1605-1614, Feb. 2022, doi: 10.1109/TPEL.2021.3104284.

[5] P. Lai et al., "Development of LTCC-packaged Optocouplers as Optical Galvanic Isolation for High-Temperature Applications", submitted to Scientific Reports.

[6] S. Madhusoodhanan et al., "High-Temperature Analysis of Optical Coupling Using AlGaAs/GaAs LEDs for High-Density Integrated Power Modules", accepted by Scientific Reports in Jan. 2022.