Advances in Vertical GaN Power Devices on GaN Substrates

T. Oka, T. Ina, Y. Ueno, N. Tanaka, J, Kurosaki, T. Suzuki, J. Nishii,
K. Hasegawa, K. Yasunishi, G. Nishio, S. Murakami, and N. Murakami

Research and Development Division, TOYODA GOSEI Co., Ltd.
1-1, Higashitakasuga, Futatsudera, Ama-City, Aichi 490-1207, JAPAN
E-mail: toru.oka@toyoda-gosei.co.jp, Phone: +81-52-449-5790

Keywords: GaN, vertical, trench, MOSFET, SBD

Abstract

GaN is an attractive material for high frequency and high power devices. Due to the availability of relatively high quality free-standing bulk GaN substrates, various vertical GaN devices on GaN substrates with excellent characteristics have been reported in recent years. In this paper, recent advances in our vertical GaN power devices are reviewed with emphasis on the trench MOS barrier Schottky diodes (TMBSs) and the trench MOSFETs.

INTRODUCTION

GaN is a promising material for high frequency and high power devices due to its wide band gap, high electron velocity, high breakdown field strength, and high thermal conductivity. In recent years, vertical GaN devices on free-standing bulk GaN substrates have attracted considerable attention. The vertical devices have a definite advantage over lateral devices in that the vertical devices increase a blocking voltage by increasing the thickness of the drift region without sacrificing the device size, leading to the implementation of high power density chip. To date, there have been many reports on vertical GaN devices with excellent characteristics such as high blocking voltage or high current p-n junction diodes [1,2], Schottky barrier diodes (SBDs) [3], junction barrier Schottky (JBS) diodes [4], trench MOS barrier Schottky diodes (TMBSs) [5], trench MOSFETs [6-8], HFETs with regrown AlGaN/GaN layers [9], and fin power FETs [10]. In this paper, we address technological developments of our vertical GaN power devices fabricated on GaN substrates with especially emphasis on recent research results of the TMBS and the MOSFETs [11].

VERTICAL GAN SBDS

Figure 1 shows schematic cross sections of our conventional vertical GaN SBD with mesa and field plate and the developed TMBS. The detailed conditions of their fabrications were explained elsewhere [3,5]. A structural feature of the conventional SBD is a field plate consisting of an extended pad electrode along the mesa. When biasing reverse voltage, the potential crowds at the edge of the Schottky electrode. This leads to a large leakage current and a low blocking voltage. To reduce the potential crowding, a field-plate (FP) electrode along the mesa was introduced [3]. The FP electrode wraps around the edge of the Schottky electrode over the passivation film. This structure enables the depletion region to spread towards the backside and, as a result, the potential crowding is reduced. In contrast, the TMBS comprises multiple MIS structure trenches covered with insulating films and buried with a pad electrode. In this structure, the electric field at the Schottky contact can also be reduced by extending the depletion region from the sidewalls of the trenches. As a result, a leakage current at reverse bias operation can be suppressed compared to the conventional SBDs.

Figure 2 show the comparison of the reverse I–V characteristics of the fabricated TMBS diode and the conventional SBD designed with having the same forward

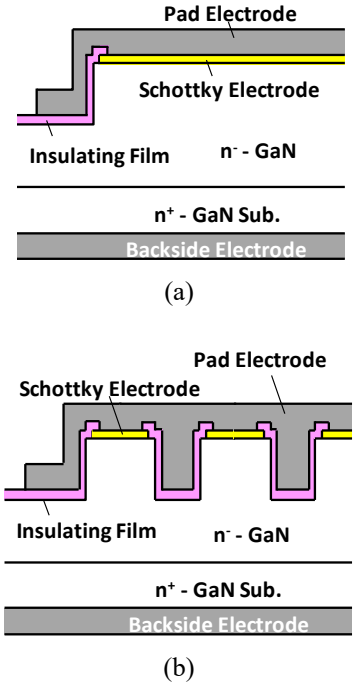

Fig. 1. Schematic cross sections of developed vertical GaN SBDs: (a) conventional SBD with mesa and field plate and (b) TMBS.

characteristics [11]. Both devices had almost the same turn-on voltage and on resistance, whereas the leakage current of the TMBS diode was about two orders of magnitude lower than that of the conventional SBD, and, as a result, the blocking voltage at a leakage current of 1 mA/cm^2 was increased from 550 V to over 800 V. Figure 3 shows the measured the temperature dependence of the forward and reverse I–V characteristics of the fabricated TMBS diode [11]. The forward current up to 50 A, and the blocking voltage over 700 V without hard breakdown were achieved even at 200 °C. These results indicate that the vertical GaN TMBS diodes are effective for attaining both high-power and high-temperature operations.

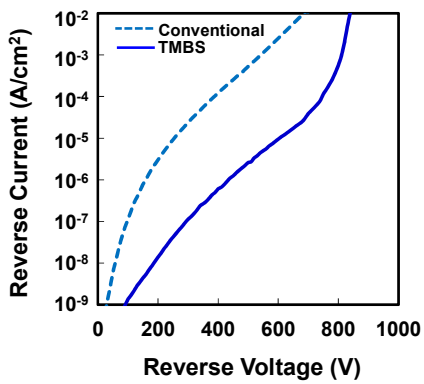

Fig. 2. Comparison of the reverse I–V characteristics of TMBS and conventional SBD [11].

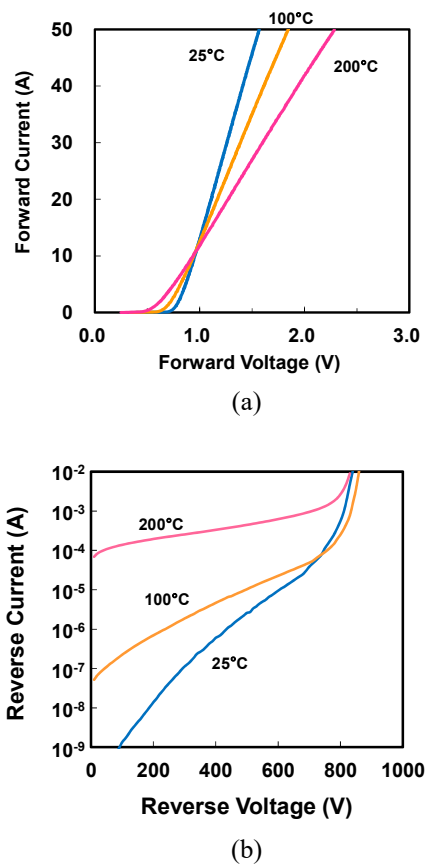

Fig. 3. (a) Forward and (b) reverse I–V characteristics of the fabricated TMBS chips measured at 25, 100, and 200 °C. [11]

VERTICAL GAN MOSFETS

Figure 4 shows a schematic cross section of the developed vertical GaN trench MOSFET. The detailed condition of the fabrication was explained elsewhere [6]. Due to the lack of effective edge-termination techniques using ion-implantation in GaN, we employed an FP around the isolation mesa periphery. In this structure, the potential mostly crowds at the edge of the p-n junction under the off-state condition. To reduce the potential crowding effectively, the depth of the isolation mesa and the thickness of the passivation films were well-designed in order for the field-plate electrode to completely overlap the edge of the p-n junction from the side.

Figure 5 shows the off-state I–V characteristics for the fabricated trench MOSFETs with and without the FP edge termination [6]. During the measurements, the gate currents

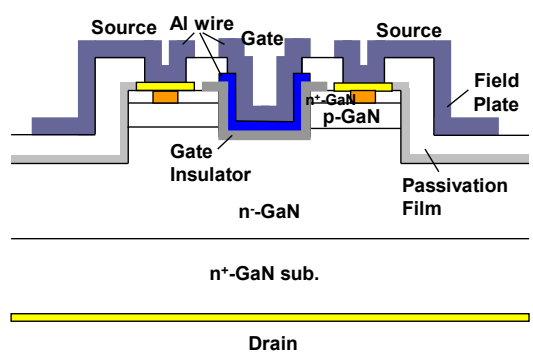

Fig. 4. Schematic cross sections of developed vertical GaN trench MOSFET with an FP edge termination.

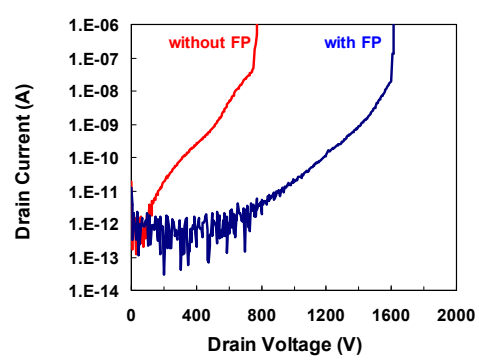

Fig. 5. Schematic cross sections of vertical GaN trench MOSFET with field plate edge termination [6].

for both MOSFETs were less than the lower limit of our measurement system, implying that the drain currents originate from leakage currents between the source and the drain contacts. In addition, the drain currents varied with the presence or absence of the FP. As a result, the blocking voltage of the MOSFET increased from 775 V to 1605 V. The results verify that the field-plate reduced the leakage current flowing along the periphery of the isolation mesa and, thus, signify that our edge termination design effectively reduced the electric field at the edge of the p-n junction around the isolation mesa, leading to a substantial increase in the blocking voltage.

We have developed vertical GaN MOSFETs with hexagonal trench layout for achieving low on-resistance and applied them to multi-cell MOSFET chips for high current operations [7,8]. Here we provide switching characteristics and further high current operations of the MOSFET chips [11]. Figure 6 shows the switching waveforms of resistive-load turn-on and turn-off operations for an 80-mΩ MOSFET chip [11]. Also shown are comparison of the measured waveforms for commercially available SiC MOSFETs with almost the same specification. The GaN MOSFET exhibited superior turn-on and turn-off characteristics to the SiC MOSFETs. Figure 7 shows the output I_D–V_{DS} characteristics of a trench MOSFET with the chip resistance of 30 mΩ [11]. The drain current reached 50 A at V_{DS} of 1.5 V and V_G of 25 V.

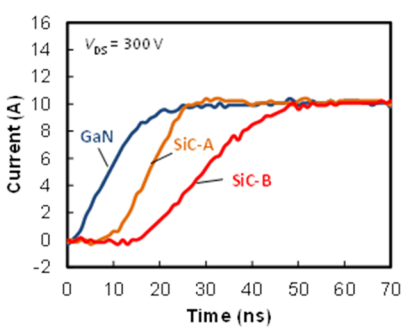

(a)

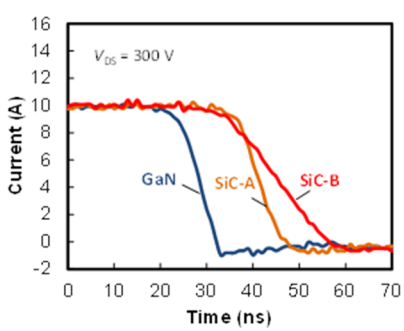

(b)

Fig. 6. Switching waveforms of resistive-load turn-on and turn-off operations for an 80-mΩ MOSFET chip: (a) turn-on and (b) turn-off waveforms [11].

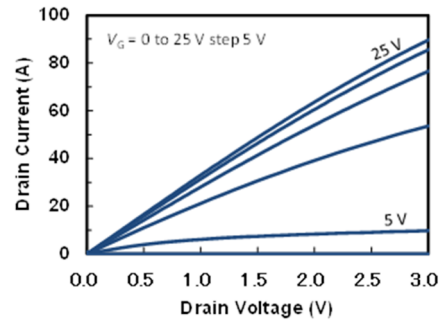

Fig. 7. Output I-V characteristics of the multi-cell trench MOSFET with the chip resistance of 30 mΩ [11].

CONCLUSIONS

We have demonstrated the recent advances in our vertical GaN SBDs and the trench MOSFETs. The results verify the great potential of the vertical GaN devices on free-standing bulk GaN substrates for high-power and high-speed switching applications.

ACKNOWLEDGEMENTS

The authors would like to gratefully thank process and epitaxial growth staff for their contribution to the device fabrication. They also express sincere gratitude to Keiji Onda for measuring and discussing switching characteristics.

REFERENCES

[1] H. Ota et al., Jpn. J. Appl. Phys. 57, 04FG09, 2018.
[2] I. C. Kizilyalli et al., IEEE Electron Device Lett., 35, p. 654, 2014.
[3] N. Tanaka et al., Appl. Phys. Express, 8, 071001, 2015.
[4] T. Hayashida et al., Jpn. J. Appl. Phys. 57, 040302, 2018.
[5] K. Hasegawa et al., Appl. Phys. Express, 10, 121002, 2017.
[6] T. Oka et al., Appl. Phys. Express, 7, 021002, 2014.
[7] T. Oka et al., Appl. Phys. Express, 8, 054101, 2015.
[8] T. Oka et al., Proc. ISPSD, p. 459, 2016
[9] D. Shibata et al., IEEE IEDM Tech. Dig., p. 248, 2016.
[10] Y. Zhang et al., IEEE IEDM Tech. Dig., p. 215, 2017.
[11] T. Oka et al., Ext. Abstr. 2018 Int. Conf. Solid State Device and Materials, p. 293, 2018.

ACRONYMS

SBD: Schottky barrier diode
JBS: Junction barrier Schottky
MOS: Metal Oxide Semiconductor
TMBS: trench MOS barrier Schottky
FET: field-effect transistor